Great Lakes Maritime Research Institute

A University of Wisconsin - Superior and University of Minnesota Duluth Consortium

MICHIGAN

Evaluation of Integrated Electric Plants for Great Lakes Self-Unloaders

PI: David J. Singer, Assistant Professor, Naval Architecture and Marine Engineering, University of Michigan

Co-PI: Michael G. Parsons, Arthur F. Thurnau Professor Emeritus, Naval Architecture and Marine Engineering University of Michigan

Undergraduate student: Sam Denomy, Port Huron, MI

Outline

- Definitions/Motivation
- Project goals
- Recent cargo vessel IEP example
- Study prototypes selected
- Fuel usage study
- Issues still to address

Integrated Electric Plants (IEP)

Integrated Electric Plants

- Central station electric plants serving all needs including electric propulsion motors
- Cruise ships, naval vessels, offshore supply vessels, ice breakers, etc.

Currently (1970-2010):

- Great Lakes self-unloaders use geared diesel mechanical propulsion and small separate electrical plants for auxiliary loads – with some limited exceptions

Designer's Comments

"electric drive should be considered for any application where the ship spends much of its time at loitering speeds, when high ship (*service*) power requirements exist, or where special mission power requirements dictate its use"

"all modern electric drive installations are of the integrated type with the same generators used to provide both propulsion and ship service power"

(George Stewart, ASNE/SNAME Electric Ship Design Symposium 2009).

"Experience has shown that it is not only the owner to be convinced but also and in many cases especially the yard. Having little or no experience in electric propulsion plants yards tend to consider it as a risk and overestimate all additional items and under estimate or do not consider at all the benefits and opportunities."

Shipbuilding benefits include:

- short and straight routing of piping and cables
- possibility of extensive prefabrication and modular construction
- shortest possible installation period

"A savings of at least 50% in machinery and piping installation hours can be achieved."

(Kanerva and Nurmi 1998)

Great Lakes Self-Unloading Bulk Carriers
almost a perfect case for IEP application

- modest power requirement due to their low speed
- varying speed profile due to the short distances and many restricted waterways, locks, and connecting channels of the Great Lakes system.

  "A typical Great Lakes self-unloading bulk carrier spends about 1/3 of its operating time at reduced power and in port."

  (Joe Fischer and Ed Shearer 2004).

- thruster, self-unloading and ballasting loads that are relative large fractions of the propulsion power required.

Project Recommendation from Industry

Received by GLMRI from the Great Lakes shipping industry:

"Look into developing an electric drive that would take into account the electrical use during all of our modes of operation while considering benefits such as:

- constant engine RPM
- generator loading
- maintenance and manning."

Project goals

- Investigate the feasibility and potential benefits of using Integrated Electric Plants in future Great Lakes self-unloaders
- Considering
  - arrangements
  - effects on cargo capacity at constant draft
  - fuel usage and environmental emissions over all operating modes
  - manning
  - overall ship life-cycle economics

Recent Cargo Vessel IEP Example

TOTE *Orca* Class RO-RO Vessels

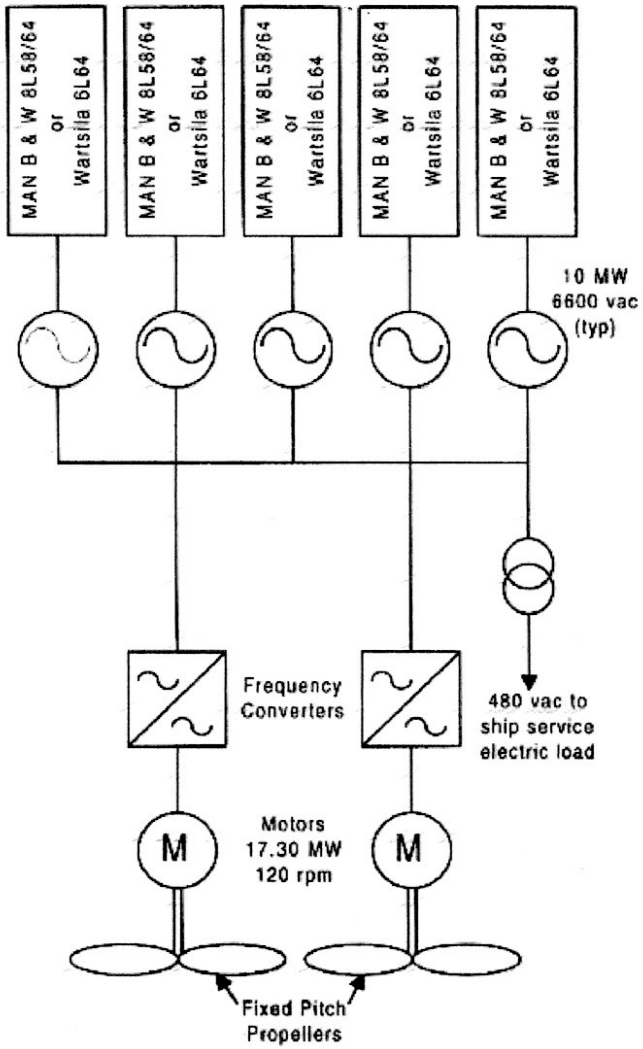

from Maritech supported study of 17 alternatives

final design used four large and two small generators

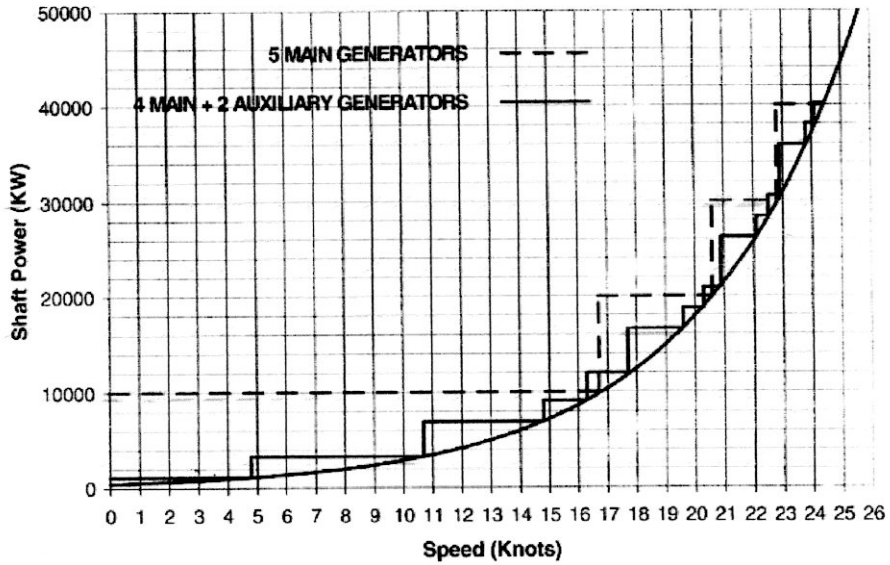

Advantages and Disadvantages of IEP

Advantages

- reduced number of prime movers (diesels) possible
- engines can be run closer to sweet spot in all modes
- more flexible arrangements
- can eliminate gearing
- can eliminate need for CRP propeller
- reduced maintenance
- fuel use can be less
- emissions can be less

Disadvantages

- may require more volume
- greater weight – problematic on weight-limited bulk carriers
- about 7% loss in transmission efficiency (diesel to propeller)
- greater capital cost

Comparison of Prime Mover Brake Power

Prime mover brake power $P_B = P_E/(\eta_H\ \eta_R\ \eta_o\ \eta_T\ \eta_S\ \eta_B)$

Geared diesel drive with Controllable Reversible Propeller (CRP)

with $\eta_T = \eta_g = 0.97$ and $\eta_o = 0.65$ (approx.)

AC/AC electric drive with Fixed Pitch Propeller (FPP)

With $\eta_T = \eta_{gen}\ \eta_{sw}\ \eta_{tr}\ \eta_{fc}\ \eta_m$

$= 0.96 \times 1.00 \times 0.99 \times 0.98 \times 0.96 = 0.894$

and $\eta_o = 0.66$ (approx.,+1.5% better)

Net effect = 0.97x0.65/(0.96x1.00x0.99x0.98x0.96x0.66) = 1.068

Diesel Generator Specific Fuel Rate – Constant RPM

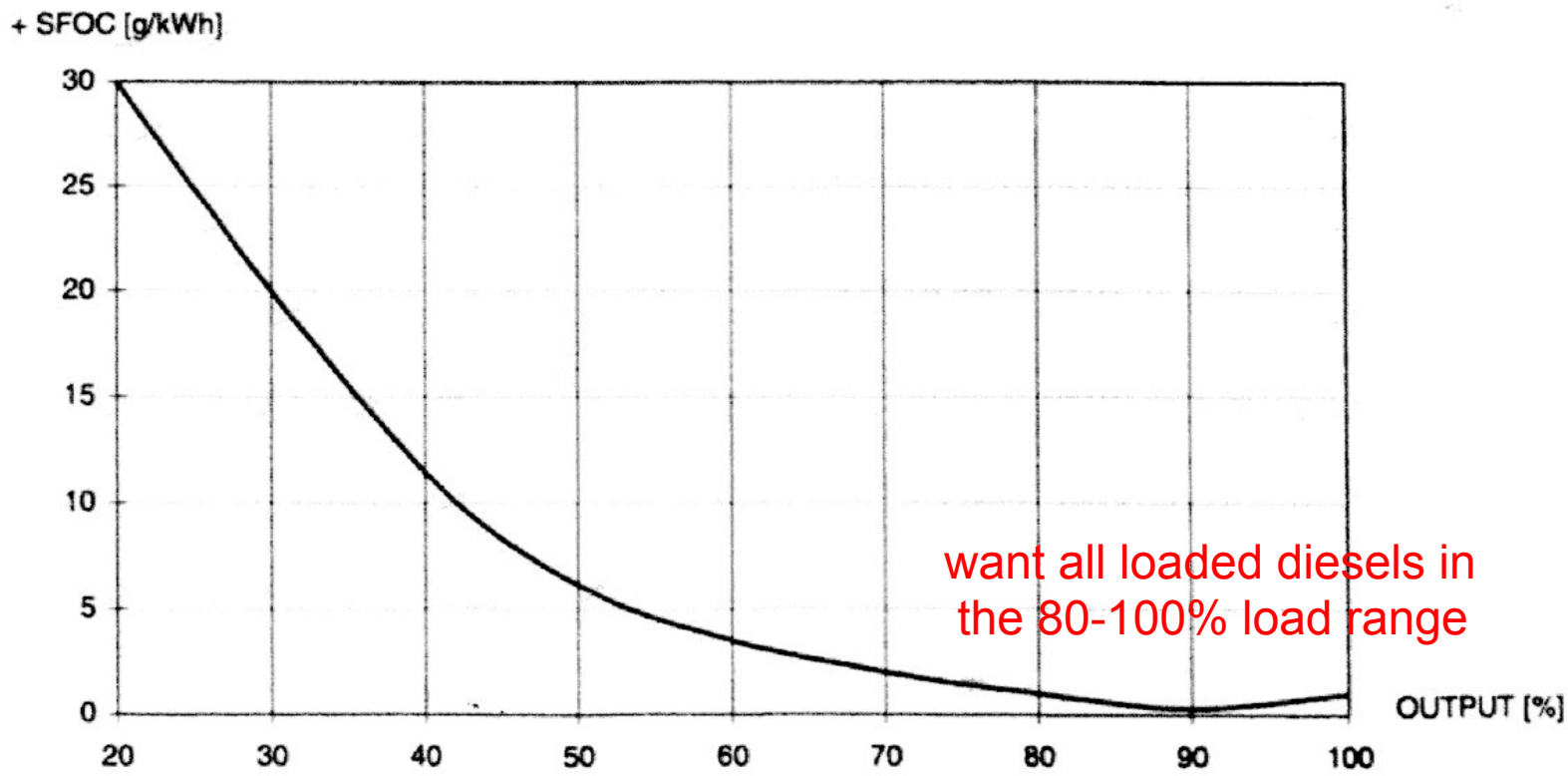

Principal Characteristics of Study Prototypes

	1000 ft (Poe-max) Self-Unloader	730 ft (MacArthur-max) Self-Unloader
LOA	1000 ft	730 ft
B	105 ft	78 ft
D	56 ft	45 ft
Design T	27.5 ft	27.5 ft
Service speed	14.0 kts	14.0 kts
Capacity	80,900 gross tons	37,300 gross tons
Current propulsion power	14,000 hp = 10,440 kW	7,000 hp = 5,220 kW
Number shafts	twin screw	single screw
Propellers	17.5 ft. dia., 120 rpm FPP	17.5 ft dia., 120 rpm FPP
Bow thruster	1200 kW	800 kW
Stern thruster	1200 kW	800 kW
Hold-loop belt drive	2 @ 750 kW = 1500 kW	conveyor system total
Boom belt drive	2 @ 430 kW = 860 kW	1300 kW
Ballast pumps	4 @ 120 kW = 480kW	2 @ 120 kW = 240 kW
Ship service power	466.6 kW, max. during docking	510 kW, max. during docking
Design prototype	MV *Walter J. McCarthy*	MV *American Mariner*

Operating Profile – Duluth, MN to Gary, IN

mode of operation	percent propulsion power	auxiliaries in use	hours per round trip	percent round trip time
loading	0.0%	ship service, ballast pumps	6.0	4.4%
maneuvering	30.0%	ship service	6.0	4.4%
reduced speed	50.0%	ship service	8.0	5.9%
open lake	85.0%	ship service	103.0	76.3%
locking/docking	10.0%	ship service, thrusters	2.0	1.5%
unloading	0.0%	ship service, ballast pumps, conveyors,	10.0	7.4%
total			135.0	100.0%

1000’ IEP Self-Unloader (all EPA Tier II)

- New M/V *Walter J. McCarthy, Jr.*
  - diesel mechanical CRP drive
  - 4 x EMD 16-710G7C-T2 2629 kW engines, generators on 2
  - 2 x Cat 600 kWe generators
- IEP Design using Caterpillar Generators
  - 4 x Cat C280-8 2420 kWe generators
  - 2 x Cat 3508B 910 kWe generators
- IEP Design using Wärtsilä Generators
  - 4 x Wärtsilä 9L26 2810 kWe
  - 1 x Wärtsilä 6L20DF 1014 kWe

Summary of 1000'er Results

$$\text{fuel/voyage} = \sum_{\text{modes}} \sum_{\substack{\text{generators}\\ \text{operating}}} (\text{gm/kWh})(\text{kW/mode})(\text{h/voyage})$$

design	effective t/h	fuel $/voyage	savings
New *Walter J. McCarthy, Jr.*	1.744	$129,459	base
IEP with Caterpillar generators	1.620	$120,269	$9,190 (7.1%) (4.1% due to sfr)
IEP with Wärtsilä Generators	1.536	$114,024	$15,435 (11.9%) (7.9% due to sfr)

based on $550/tonne fuel

730' IEP Self-Unloader (all EPA Tier II)

- New M/V *American Mariner*
  - diesel mechanical CRP drive
  - 2 x EMD 16-710G7C-T2 2629 kW engines
  - 4 x Cat 600 kWe generators
- IEP Design using Caterpillar Generators
  - 2 x Cat C280-8 2200 kWe generators
  - 2 x Cat 3508B 715 kWe generators
- IEP Design using Wärtsilä Generators
  - 2 x Wärtsilä 9L26 2810 kWe
  - 1 x Wärtsilä 6L20DF 1014 kWe

Summary of 730'er Results

$$\text{fuel/voyage} = \sum_{\text{modes}} \sum_{\substack{\text{generators}\\ \text{operating}}} (\text{gm/kWh})(\text{kW/mode})(\text{h/voyage})$$

design	effective t/h	fuel $/voyage	savings
New *American Mariner*	0.884	$65,659	base
IEP with Caterpillar generators	0.841	$62,430	$3,229 (4.9%) (4.1% due to sfr)
IEP with Wärtsilä generators	0.798	$59,259	$6,400 (9.8%) (7.9% due to sfr)

based on $550/tonne fuel

Issues Still to Address

- Emissions study following Harkins' methodology
  (*Marine Technology*, July, 2007)
- Arrangements development, weight impacts
- Modular generators on main deck
- Modular generators owned by manufacturer with kWh purchased as an operating cost, including major maintenance; reduced capital cost
- LNG use, particularly after 2015
- Economics study

Special thanks to

Noel L. Bassett, Acting President
American Steamship Company, Williamsville, NY for details on the M/V *Walter J. McCarthy, Jr.* and the M/V *American Mariner*

John F. Hatley, Americas Vice President Ship Power
Wärtsilä North America, Houston, TX

Questions?